DATA SHEETS

6NNT

CORNELL
EFFICIENT BY DESIGN

***NOW STOCKED IN CD4MCu**

MOUNTING CONFIGURATIONS

6NNT-RP-F Redi-Prime®Frame Mount
6NNT-RP-EM Redi-Prime® Engine Mount
6NNT-F Frame Mount
6NNT-EM Engine Mount
6NNT-CC Close-Coupled Mount
6NNT-VM Vertical Mount
6NNT-VF Vertical Frame Mount

STOCK MATERIALS

All Iron, CD4MCu

OPERATING LEVELS

MAX FLOW:	2750 GPM	173.5 L/S
DISCHARGE SIZE:	6"	15 cm
SUCTION SIZE:	6"	15 cm
SOLIDS HANDLING:	3"	7.6 cm
MAX SPEED:	2100 RPM	2100 RPM
MAX HEAD:	150'	46 m

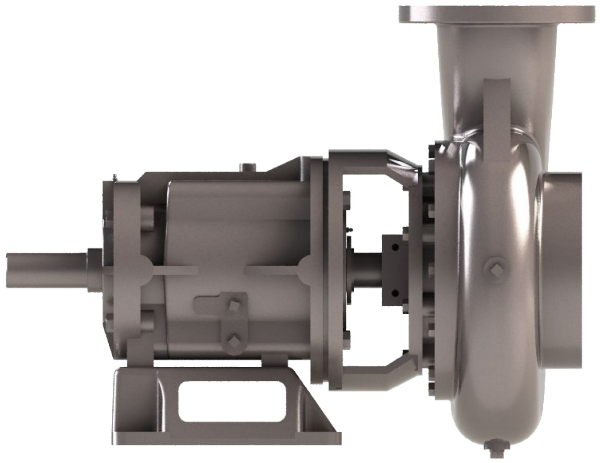

A typical picture of the pump is shown. Please contact Cornell Pump Company for further details. All information is approximate and for general guidance only.

Pump designed with Cornell's renowned quality and durability. Features a 6" discharge and a 6" suction, with an enclosed two vane impeller design that handles up to a 3" solid. Available in all iron and CD4MCu materials. Cd4MCu usable in pH's of 2 to 13.5, with Brinell hardness of up to 285. Cornell's patented Cycloseal® design is standard, with a John Crane T-2 single mechanical seal with Viton® elastomers, with stainless steel hardware and tungsten carbide vs. silicon carbide seal faces for abrasion resistance. Bearings are heavy-duty, grease lubricated, deep ball bearings with a minimum of 50,000 hours bearing life.

PARTS	STANDARD MATERIAL (ALL IRON)	CD4MCU
WEAR RINGS	CAST IRON ASTM A48 Class 30	2205 Duplex SS FF ASTM A890
IMPELLER	CAST IRON ASTM A48 Class 30	CD4MCu Cast Stainless ASTM A890 Grade 1A
VOLUTE	CAST IRON ASTM A48 Class 30	CD4MCu Cast Stainless ASTM A890 Grade 1A
SHAFT	1144 Stress Proof Steel	17-4PH Stainless Steel FH -H1075
SHAFT SLEEVE	416 Stainless Steel	316 Stainless Steel

- Superior lift capability
- Excellent NPSHr
- High-efficiency design
- Variable speed
- 24-hour run time
- Cycloseal® design mechanical seal
- Heavy-duty construction
- RunDry™ option (Indefinite run dry capability)
- Unmanned operations
- Redi-Prime® fully automatic self-priming, dry-priming available
- 150 lb. flange on CD4MCu; 125 lb. flange on all iron pump

AGRICULTURE FOOD INDUSTRIAL MINING MUNICIPAL OIL & GAS REFRIGERATION RENTAL

A typical picture of the pump is shown. Please contact Cornell Pump Company for further details. All information is approximate and for general guidance only.

6NNT

Feet x .305 = Meters
Inches x 25.4 = Millimeters
GPM x .227 = Cubic Meters/Hour
GPM x 3.785 = Liters/Minute
HP x .746 = KW

Speed	Impeller Dia.	Style	Solids Dia.	N_S	Suction	Discharge	No. vanes
VARIOUS	10.09"	ENCLOSED	3.0"	3300	6"	6"	2

SINGLE VOLUTE

MOUNTING CONFIG.: CC, VM, F, VF, EM, VC

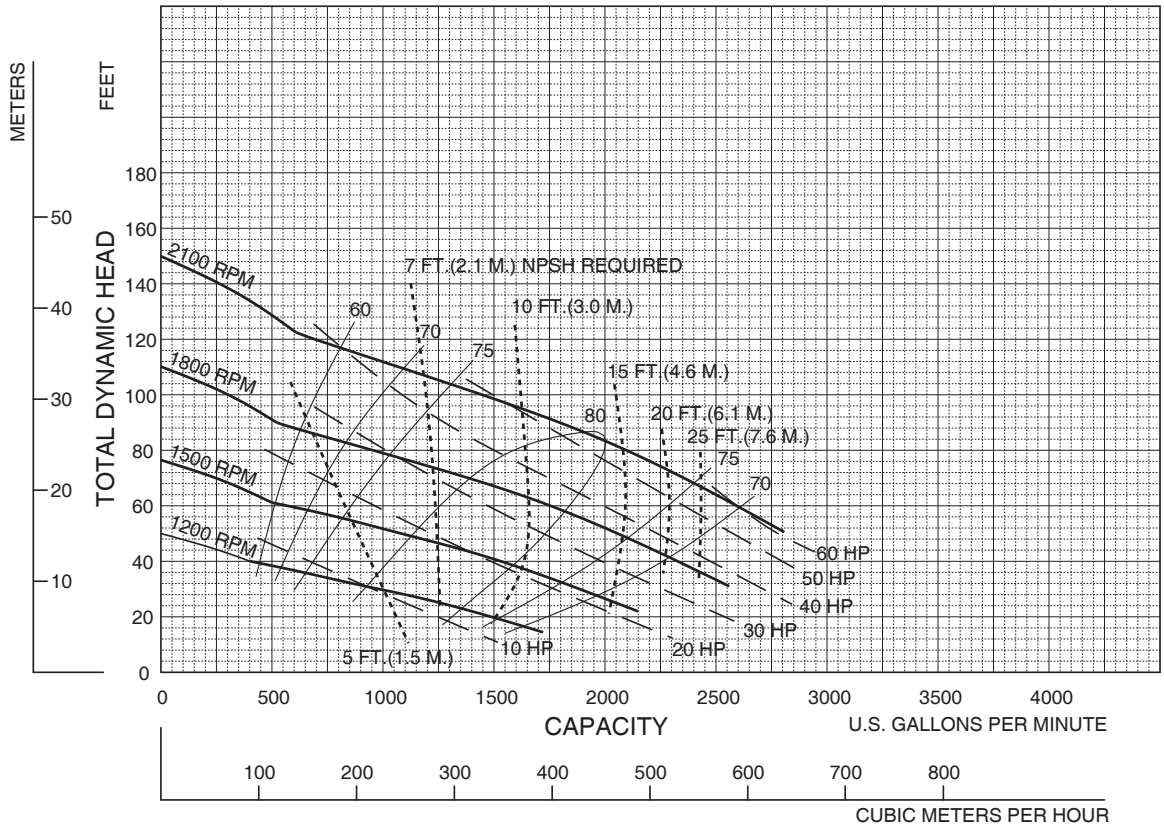

Performances shown are for cool water, close-coupled electric configuration with Cycloseal®. Other mounting styles or liquids may require horsepower and/or performance adjustments.

1/15/00

NEW PAGE

6NNTVA